Hillmar
Hillmar Industries Ltd.
7371 Vantage Way
Delta, BC V4G 1C9
P:604 946-7115 F:604 946-0329
info@hillmar.com www.hillmar.com

COUPLING PKM
PKM-400-MSH-LSH-1000-30-40050
SPECIFICATION SHEET
SLS & MKTG
ENGLISH

Sheet Number:	
Job Number:	
Form Number:	429-610-46852PT
Company / Project Reference:	
Date.:	
Page.:	1 OF 1
Document Package No.:	
Rev.:	

Inventor Drawing

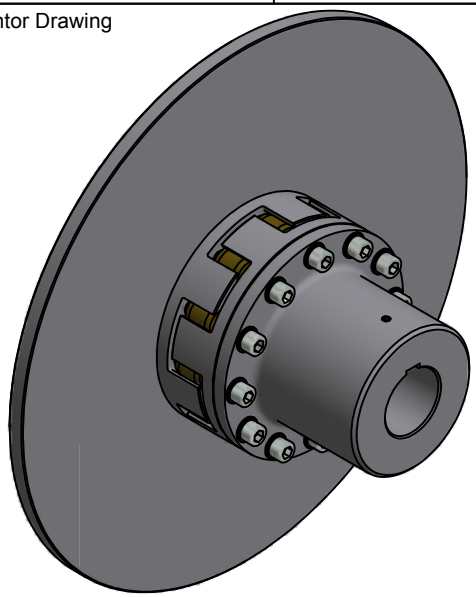

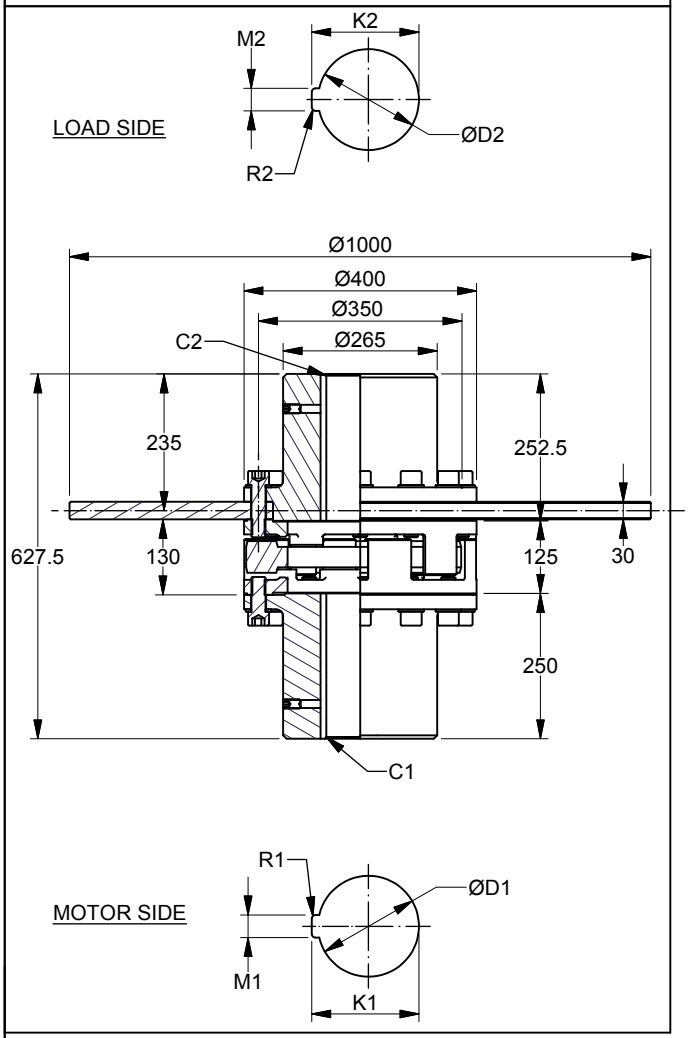

FEATURE	CODE
Polyerethane coupling	PKM
Coupling size (Hub OD)	400
Motor side	MSH
Load side	LSH
Disc diameter (mm)	1000
Disc thickness (mm)	30
Maximum coupling torque (Nm)	40050

Example for ordering	PKM-400-MSH-LSH-1000-30-44050

TECHNICAL DATA

Disc model	SDBD-1000-30-400
Disc diameter (mm)	1000
Hub bore size MIN. (mm)	120
D1 MAX. (mm)	160
D2 MAX. (mm)	160
Moment of inertia (kgm^2)	25.65
Mounting bolts	12 x M24
Bolt tightening torque (Nm)	710
MAX. coupling torque TkMAX (Nm)	40050
NOM. coupling torque TkN (Nm)	14550
MAX. coupling speed (RPM)	1800
Weight (kg)	389

CUSTOMER SPECIFICATIONS

Motor side	Load side
D1:_____mm	D2:_____mm
M1:_____mm	M2:_____mm
K1:_____mm	K2:_____mm
R1:_____mm	R2:_____mm
C1:_____mm	C2:_____mm

NOTES

Coupling balancing grade ISO 1940-G6.3 is guaranteed for all coupling parts.

All figures are nominal figures only

All dimensions are in millimeters

Document Template #710-101-62058

** ALL TECHNICAL DATA IS SUBJECT TO CHANGE WITHOUT NOTICE **
Hillmar works have a fully registered ISO 9001-2008 quality assurance programme (QCB #01-1525)

C:\TEMP\a3f49bb3-e10c-4cd0-aed8-26c1c4c1b337\8000052810 2\HILLMAR\HILLMAR PRODUCTION\04 THRUSTER DB\0700-4\07004005 PKM-GKM-RKSM-RKX\SPC-SHT-PKM-GKM-RKSM-RKX\01 PKM\46852 PKM-400-MSH-LSH-1000-30-40050.idw